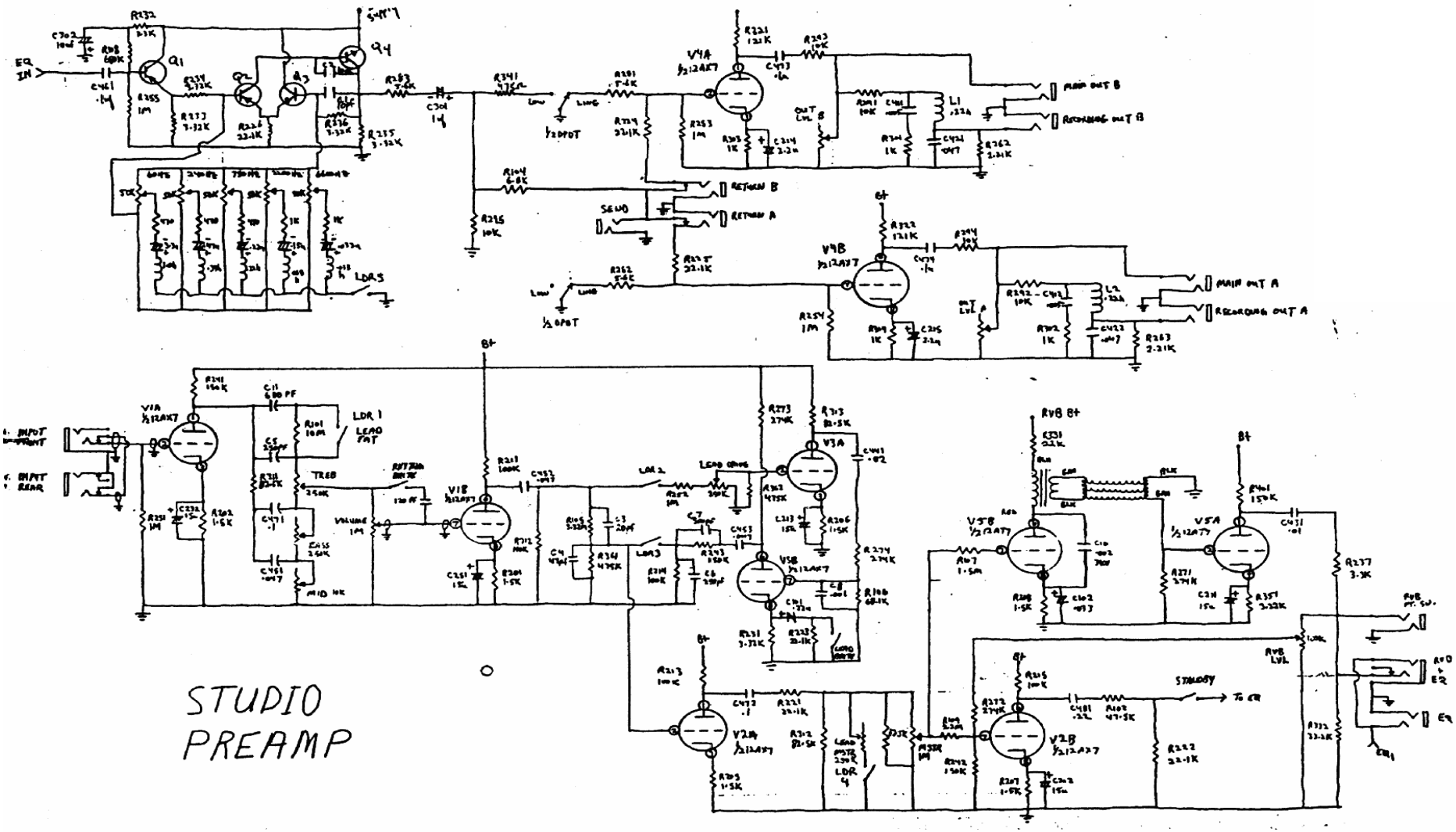

STUDIO PREAMP

V5
B ○ A
V5 B: rev. send
V5 A: rev. recieve

V4
B ○ A
main outs

V3
B ○ A
lead overdrive tube

V2b
reverb mix
ER send

V2
B ○ A
V2a: 3rd triode (rhythm)
4th triode (after V3, lead)

V1
B ○ A
input + tone